UNIVERSITY OF CAMBRIDGE INTERNATIONAL EXAMINATIONS
International General Certificate of Secondary Education

CANDIDATE NAME	

CENTRE NUMBER						CANDIDATE NUMBER					

6402514491

PHYSICS **0625/23**

Paper 2 Core **October/November 2011**

1 hour 15 minutes

Candidates answer on the Question Paper.

No Additional Materials are required.

READ THESE INSTRUCTIONS FIRST

Write your Centre number, candidate number and name on all the work you hand in.
Write in dark blue or black pen.
You may use a soft pencil for any diagrams, graphs or rough working.
Do not use staples, paper clips, highlighters, glue or correction fluid.
DO **NOT** WRITE IN ANY BARCODES.

Answer **all** questions.
You may lose marks if you do not show your working or if you do not use appropriate units.
Take the weight of 1 kg to be 10 N (i.e. acceleration of free fall = 10 m / s^2).

At the end of the examination, fasten all your work securely together.
The number of marks is given in brackets [ ] at the end of each question or part question.

This document consists of **20** printed pages.

DC (CW/CGW) 34016/3
© UCLES 2011

UNIVERSITY of CAMBRIDGE International Examinations

[Turn over

www.root19.com +91 - 9969 353 391

1 Fig. 1.1 shows the route OPQR taken by a car.

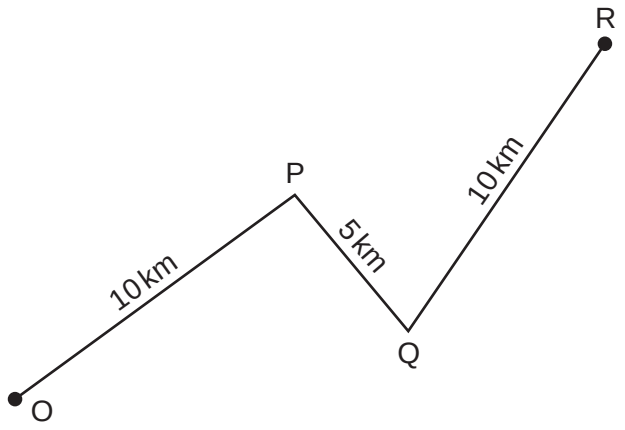

Fig. 1.1

Fig. 1.2 shows the speed-time graph for the car journey. The car starts from rest at O.

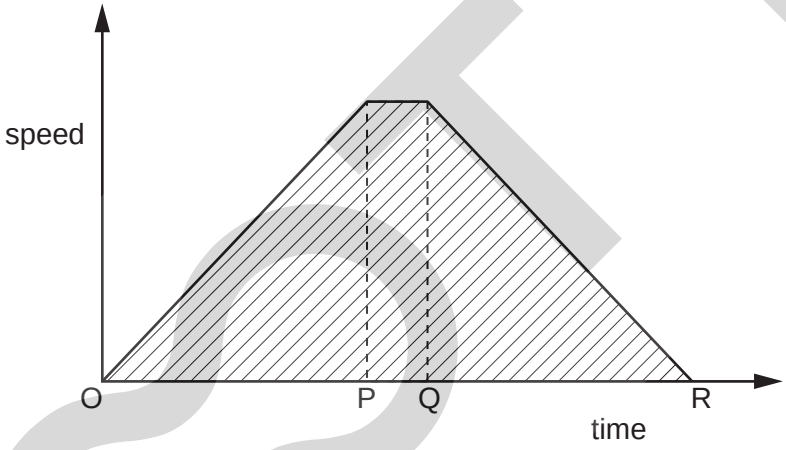

Fig. 1.2

(a) State the value of the distance represented by the shaded area.

.....[1]

(b) State what the car was doing during the interval

(i) OP, ...[1]

(ii) PQ, ...[1]

(iii) QR. .....[1]

(c) Is the average speed during the journey the same as, less than or more than the maximum speed shown on the graph?

.....[1]

[Total: 5]

www.root19.com +91 - 9969 353 391

2 Some very fine grains of powder are mixed with some water. The powder does not dissolve. A small drop of the mixture is put on a glass slide and viewed through a microscope.

The powder grains are observed to be moving with a jerky, random motion.

(a) What name is given to this movement of the powder grains?

.....[1]

(b) Explain why the powder grains behave like this.

.....

.....

.....

.....[2]

[Total: 3]

© UCLES 2011
www.root19.com

+91 - 9969 353 091

3 Fig. 3.1 shows a vertical strip made of springy metal, clamped at the top.

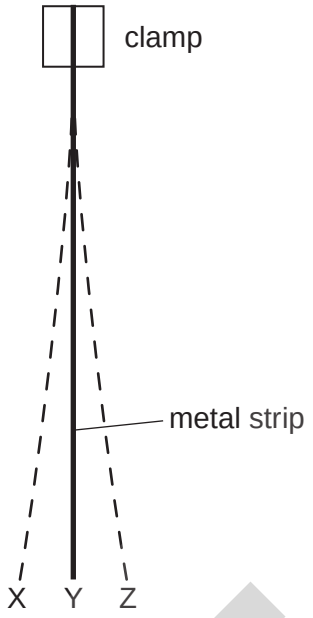

Fig. 3.1

(a) The strip is moved from position Y to position X.

The work done moving the strip is stored as energy in the strip.

In which form is this energy?

.....[1]

(b) The strip is released from X and it initially oscillates between X and Z.

In which position does the strip have maximum kinetic energy?

.....[1]

(c) As time progresses, the frequency of the oscillation remains the same but the amplitude becomes less.

(i) State what is meant by

1. *frequency*,

.....

.....[2]

2. *amplitude*.

.....

.....[2]

(ii) What happens to the total energy of the strip as the amplitude decreases?

.....

.....[1]

(d) When the oscillations eventually cease, in which position does the strip come to rest?

.....[1]

[Total: 8]

© UCLES 2011
www.root19.com

+91 - 9969 35 35 01

4 Matter exists in three states: solid, liquid and gas.

Steam is coming out of a kettle of boiling water. When the steam strikes a cold jug, it makes the jug wet.

(a) In which of the three states is

(i) the boiling water, ...

(ii) the steam, ...

(iii) the water on the jug? .....[3]

(b) All of the following words are names of things that could happen during a change of state.

boiling, condensation, evaporation, melting, solidification

State which of these is used to describe what happens to the steam to make the jug wet.

.....[1]

(c) When the steam hits the jug, what happens to the energy stored in the steam?

.....[1]

[Total: 5]

© UCLES 2011
www.root19.com

+91 - 9969 353 391

5 A flask with a tap has a volume of 200 cm^3.

When full of air, the flask has a mass of 30.98 g.

The flask is connected to a vacuum pump, the air is pumped out and then the tap is closed.

The flask now has a mass of 30.72 g.

Calculate

(a) the mass of the air in the flask before connecting to the vacuum pump,

mass = ... g [2]

(b) the density of the air in the flask.

density = ... [4]

[Total: 6]

© UCLES 2011
www.root19.com

+91 - 9969 353 301

6 A boat is using echo-sounding equipment to measure the depth of the water underneath it, as illustrated in Fig. 6.1.

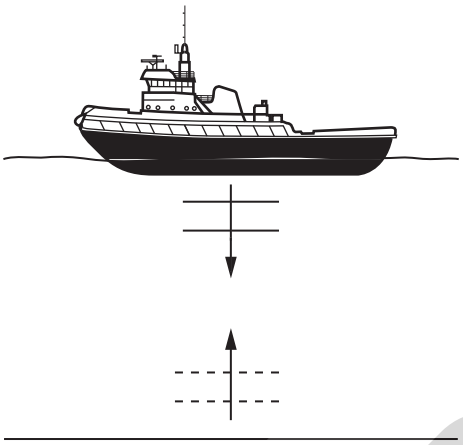

Fig. 6.1

(a) The equipment in the boat sends a short pulse of sound downwards and detects the echo after a time interval of 0.80 s.

(i) Describe how an echo is caused.

.....

.....

.....[2]

(ii) The speed of sound in water is 1500 m / s.
Calculate the distance travelled by the sound in 0.80 s.

distance travelled = ... m [3]

(iii) State the depth of water under the boat.

depth = ...m [1]

© UCLES 2011
www.root19.com

+91 - 9969 353 391

(b) The boat is sailing away from the shore. The depth of water increases uniformly with distance from the shore.

On Fig. 6.2, sketch a graph that shows how the time interval to hear the echo might change as the distance from the shore changes.

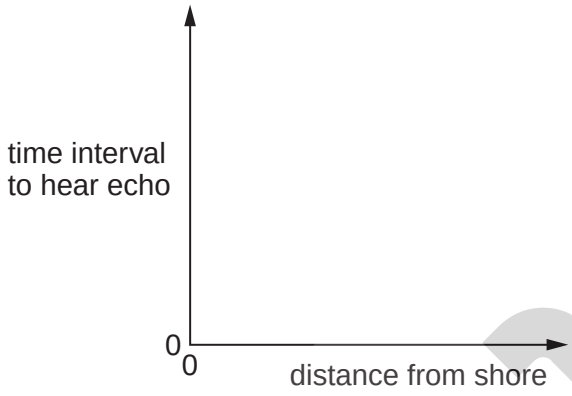

Fig. 6.2

[2]

[Total: 8]

© UCLES 2011

www.root19.com
+91 - 9969 353 301

7 **(a)** Fig. 7.1 shows a point object P above a horizontal plane mirror.

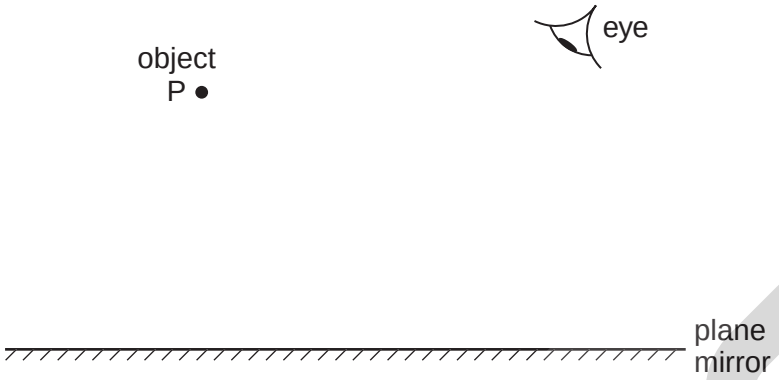

Fig. 7.1

On Fig. 7.1,

(i) mark and label the position of the image of P, [2]

(ii) draw a line showing how a ray of light travels from the object to the eye. [2]

(b) A boy carefully writes HE CHECKED HIS BOOK on a piece of graph paper. He lays the paper on the table and then positions a vertical mirror as shown in Fig. 7.2.

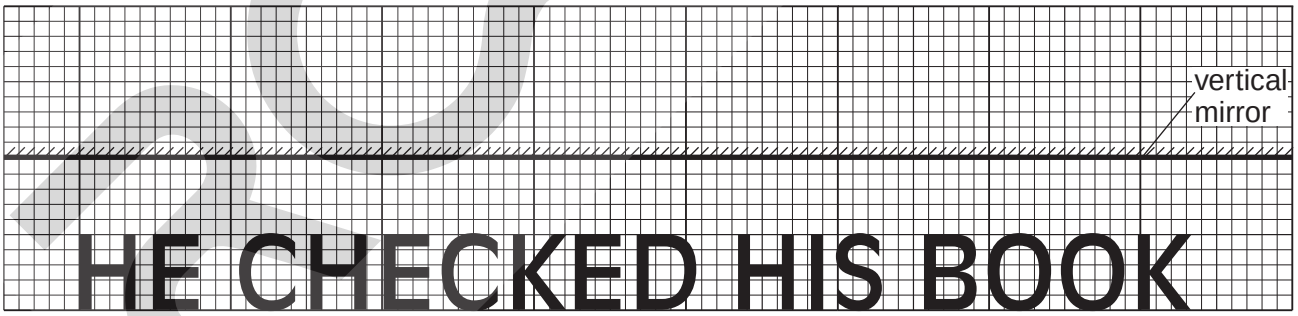

Fig. 7.2

Which word of the reflection of the sentence in the mirror looks different from that written on the paper?

.....[1]

www.root19.com +91 - 9969 353 391

(c) The two prisms shown in Fig. 7.3 are made of glass.
A ray of red light enters each prism from the air, as shown.

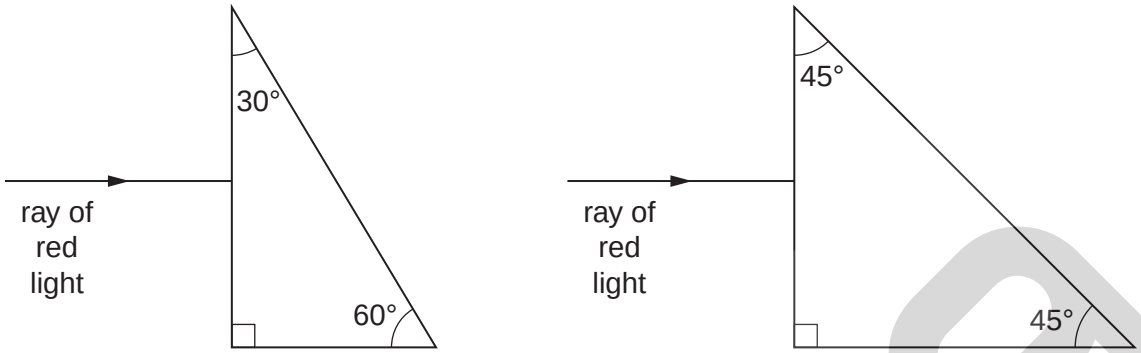

Fig. 7.3

The critical angle for red light at the glass-air boundary is 42°.

On Fig. 7.3, complete the paths of the rays through the prisms and out into the air again. [5]

[Total: 10]

© UCLES 2011

8 **(a)** A student tests to see whether certain materials conduct electricity. He uses the circuit in Fig. 8.1 and connects the materials in turn in the gap between P and Q.

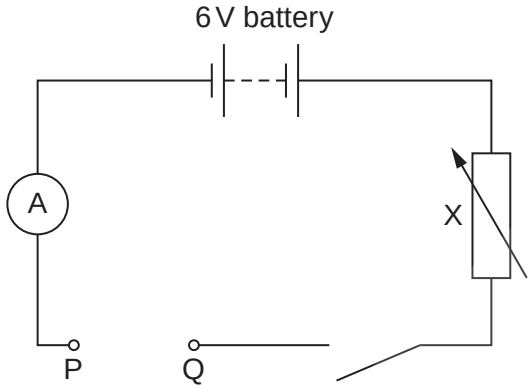

Fig. 8.1

(i) What is the purpose of component X in the circuit?

.....

.....[1]

(ii) State how the student can tell if a certain material conducts electricity.

.....

.....[1]

(iii) Which of the following materials is a good conductor of electricity? Put a tick alongside each material that is a good conductor.

copper ☐

glass ☐

iron ☐

nylon ☐

perspex ☐ [1]

www.root19.com +91 - 9969 353 391

(b) The student now connects a small heater in the gap in the circuit, as shown in Fig. 8.2. He wishes to determine the resistance of the heater.

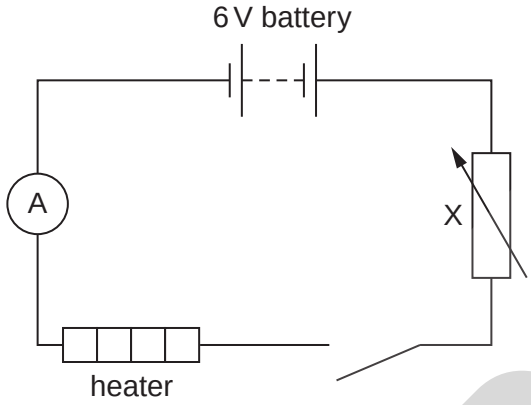

Fig. 8.2

(i) What other meter must he connect in the circuit, in order to determine the resistance?

.....[1]

(ii) On Fig. 8.2, draw this meter in the correct position in the circuit. [1]

www.root19.com +91 - 9969 353 301

(c) Fig. 8.3 shows a radiant electric fire with 3 heating elements, each of which operates at full temperature when 250 V is connected across it.

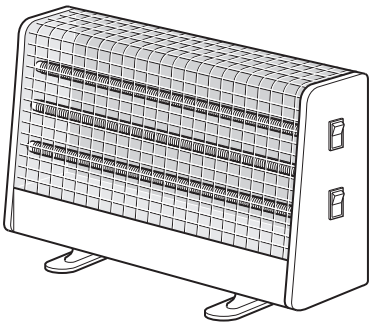

Fig. 8.3

(i) Fig. 8.4 shows an incomplete circuit diagram of the fire.

There are 2 switches. The top switch controls one heating element and the bottom switch controls two heating elements connected in parallel.

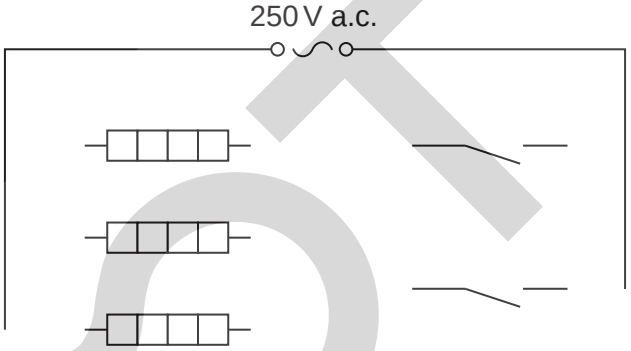

Fig. 8.4

Complete Fig. 8.4, showing all the electrical connections. [2]

(ii) The current in one heating element is 2.5 A when it is connected to the 250 V supply. Calculate the resistance of the heating element.

resistance = ... [4]

(iii) All three heating elements are switched on. Which statement about the total resistance of the electric fire is correct? Tick one box.

no resistance ☐

smaller resistance than in **(c)(ii)** ☐

same resistance as in **(c)(ii)** ☐

larger resistance than in **(c)(ii)** ☐ [1]

[Total: 12]

www.root19.com +91 - 9969 353 391

9 **(a)** A girl has two metal bars, 1 and 2.

(i) When the girl holds one end of bar 1 near a magnet, she finds that it attracts both the N pole and the S pole of the magnet.

What does this tell you about bar 1?

.....

.....[2]

(ii) When the girl holds one end of bar 2 near the magnet, it attracts the N pole of the magnet, but repels the S pole.

What does this tell you about bar 2?

.....

.....[1]

(b) In another experiment, the girl uses two table-tennis balls A and B. Each is coated with a thin layer of conducting material. Ball A is mounted on an insulating stand and ball B is suspended from a thin nylon thread. The arrangement is shown in Fig. 9.1.

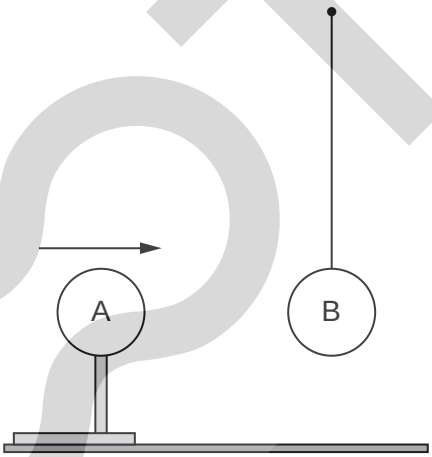

Fig. 9.1

Ball A is given a negative charge, and is slowly moved towards ball B until it touches.

Predict what is seen to happen.

.....

.....

.....

.....[2]

[Total: 5]

www.root19.com +91 - 9969 353 301

10 A coil P is joined to a battery and a switch S. A similar coil Q is joined to a sensitive centre-zero millivoltmeter G.

P and Q are placed end to end, as shown in Fig. 10.1.

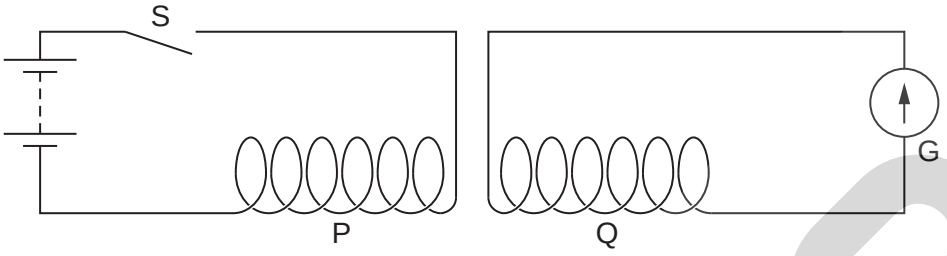

Fig. 10.1

(a) Describe what is seen happening to the reading of G

(i) as switch S is closed,

.....

.....

.....[2]

(ii) as switch S is opened again.

.....

.....

.....[1]

(b) A soft iron bar, as long as the combined lengths of P and Q, is placed inside P and Q.

State what difference this makes to what is observed on G as S is closed.

.....

.....[1]

(c) The bar in **(b)** is removed and the battery is changed for one with a smaller e.m.f.

State what difference this makes to what is observed on G as S is closed.

.....

.....[1]

www.root19.com +91 - 9969 353 391

(d) The battery is replaced by an a.c. power supply of frequency 50 cycles per second, and then S is closed.

Describe what is seen on G.

.....

.....[1]

[Total: 6]

© UCLES 2011
www.root19.com

+91 - 9969 353 301

11 The counter in Fig. 11.1 records the total number of times that a radiation is detected whilst the counter is switched on.

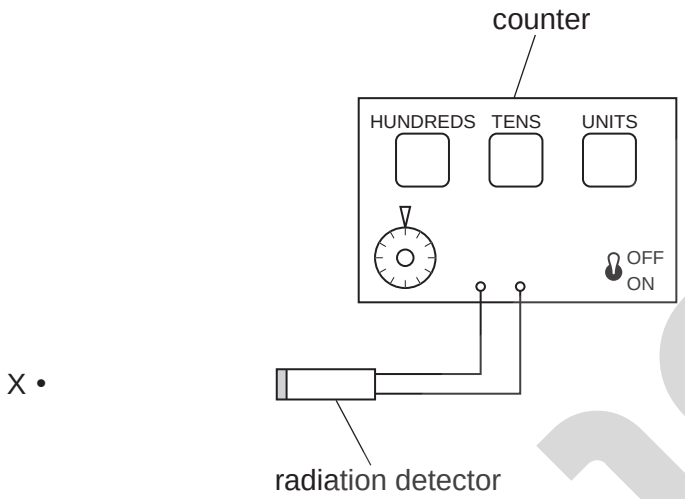

Fig. 11.1

(a) With no radioactive source present, the counter is set to zero and then switched on for 4 minutes.

After this time, the counter reads:

1	3	6

(i) What radiation is the apparatus detecting?

.....[1]

(ii) Calculate the average count rate of this radiation.

count rate = ... counts / min [2]

www.root19.com +91 - 9969 353 391

(b) **(i)** Point X is 25 cm from the radiation detector. A source that is known to be highly radioactive is placed at X.

The counter is reset to zero, and the count again taken for 4 minutes.

The counter now reads:

1	3	2

State what type of radiation is being emitted by the source.

.....[1]

(ii) The source is moved to a position 2 cm from the detector. The counter is set to zero and restarted. The counter reading after counting for 4 minutes is:

8	7	6

Estimate the count rate due to the radioactive source alone.

count rate = ... counts / min [3]

[Total: 7]

Question 12 is on the next page.

www.root19.com +91 - 9969 353 301

12 Fig. 12.1 represents a neutral lithium atom. All the particles in the atom are shown on the diagram.

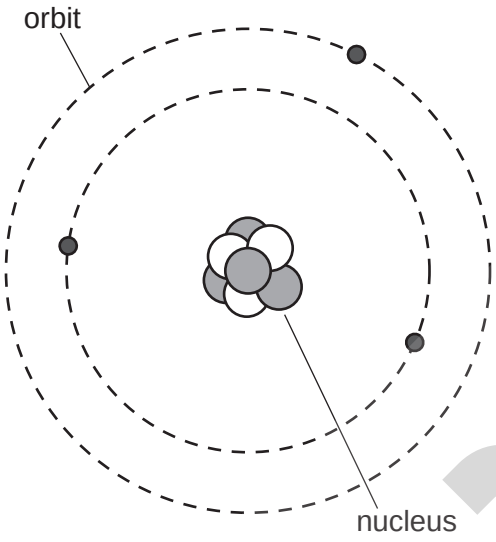

Fig. 12.1

(a) Use Fig. 12.1 to help you answer the following questions.

(i) How many electrons does this atom have? ..... [1]

(ii) What is the value of the proton number of this atom? ..... [1]

(iii) How many neutrons does the atom have? ..... [1]

(iv) What is the value of the nucleon number of this atom? ..... [1]

(b) Write the appropriate numbers in the boxes below, to represent this atom of Lithium in nuclide notation.

$^{\square}_{\square}\mathrm{Li}$

[1]

[Total: 5]

Permission to reproduce items where third-party owned material protected by copyright is included has been sought and cleared where possible. Every reasonable effort has been made by the publisher (UCLES) to trace copyright holders, but if any items requiring clearance have unwittingly been included, the publisher will be pleased to make amends at the earliest possible opportunity.

University of Cambridge International Examinations is part of the Cambridge Assessment Group. Cambridge Assessment is the brand name of University of Cambridge Local Examinations Syndicate (UCLES), which is itself a department of the University of Cambridge.

www.root19.com +91 - 9969 353 391